17.Drive Pinion Shaft Assembly

A: REMOVAL

1) Remove the manual transmission assembly from the vehicle. <Ref. to 5MT-25, REMOVAL, Manual Transmission Assembly.>
2) Remove the transfer case together with the extension case assembly. <Ref. to 5MT-39, REMOVAL, Transfer Case and Extension Case Assembly.>
3) Remove the transmission case. <Ref. to 5MT-51, REMOVAL, Transmission Case.>
4) Remove the drive pinion shaft assembly.

NOTE:
Use a hammer handle, etc. to remove if too tight.

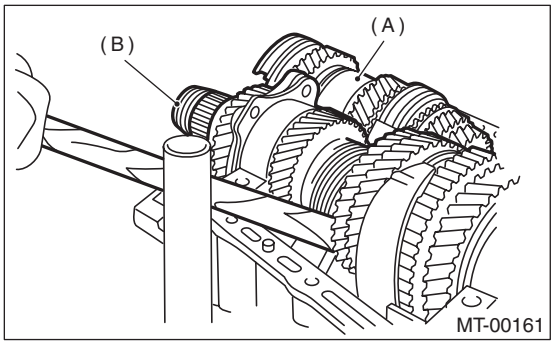

(A) Main shaft ASSY
(B) Drive pinion shaft ASSY

B: INSTALLATION

1) Remove the front differential assembly.
2) Alignment marks/numbers on hypoid gear set: The number (A) on top of the drive pinion, and the number on the hypoid driven gear are set numbers for the two gears. Use a pair having the same numbers.
The figure (B) below shows a number for shim adjustment. If no number is shown, the value is zero.

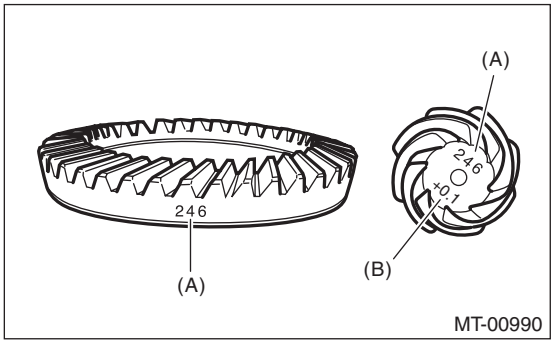

(A) Set number
(B) Number for shim adjustment

3) Place the drive pinion shaft assembly on transmission main case RH without shim and tighten the bearing mounting bolts.

4) Perform inspection and adjustment of ST.

NOTE:
- Loosen the two bolts and adjust so that the scale indicates 0.5 correctly when the plate end and the scale end are on the same level.
- Tighten the two bolts.

ST 499917500 DRIVE PINION GAUGE ASSY

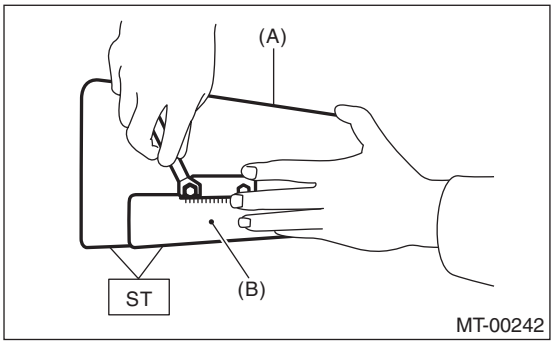

(A) Plate
(B) Scale

5) Position the ST by inserting the knock pin of ST into the knock hole of transmission case.
ST 499917500 DRIVE PINION GAUGE ASSY
6) Slide the drive pinion gauge scale with finger tip and read the value at the point where it matches with the end face of drive pinion.
ST 499917500 DRIVE PINION GAUGE ASSY

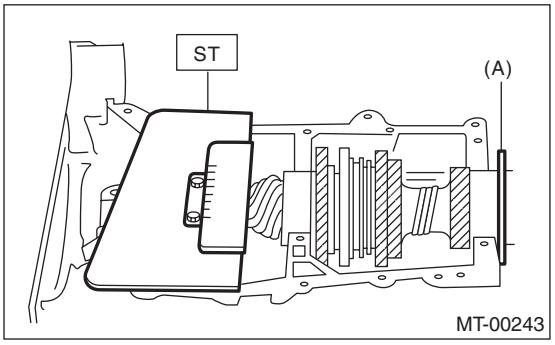

(A) Adjust the clearance to zero without shim.

7) The thickness of shim shall be determined by adding the value indicated on drive pinion to the value indicated on the ST. (Add if the number on drive pinion is prefixed by +, and subtract if the number is prefixed by –.)
ST 499917500 DRIVE PINION GAUGE ASSY

8) Select one to three shims in the following table for the value determined as described above, and take the shim(s) which thickness is closest to the said value.

Drive pinion shim	
Part No.	Thickness mm (in)
32295AA031	0.150 (0.0059)
32295AA041	0.175 (0.0069)
32295AA051	0.200 (0.0079)
32295AA061	0.225 (0.0089)
32295AA071	0.250 (0.0098)
32295AA081	0.275 (0.0108)
32295AA091	0.300 (0.0118)
32295AA101	0.500 (0.0197)

9) Install the front differential assembly. <Ref. to 5MT-68, INSTALLATION, Front Differential Assembly.>
10) Set the transmission main shaft assembly and drive pinion shaft assembly in position. (When doing so, there will be no clearance between the two when moved all the way to the front). Inspect a suitable 1st-2nd, 3rd-4th and 5th shifter fork so that the coupling sleeve and reverse driven gear are positioned in the center of the synchronizing mechanism. <Ref. to 5MT-65, INSPECTION, Drive Pinion Shaft Assembly.>
11) Install the transmission case. <Ref. to 5MT-51, INSTALLATION, Transmission Case.>
12) Install the transfer case together with the extension case assembly. <Ref. to 5MT-39, INSTALLATION, Transfer Case and Extension Case Assembly.>
13) Install the manual transmission assembly to the vehicle. <Ref. to 5MT-28, INSTALLATION, Manual Transmission Assembly.>

C: DISASSEMBLY

NOTE:
Attach a cloth to the end of driven shaft (on the frictional side of the thrust needle bearing) to prevent damage during disassembly or reassembly.
1) Flatten the nut tab. Remove the lock nut with ST1, ST2 and ST3.
ST1 899884100 HOLDER
ST2 498427100 STOPPER
ST3 899988608 SOCKET WRENCH (27)

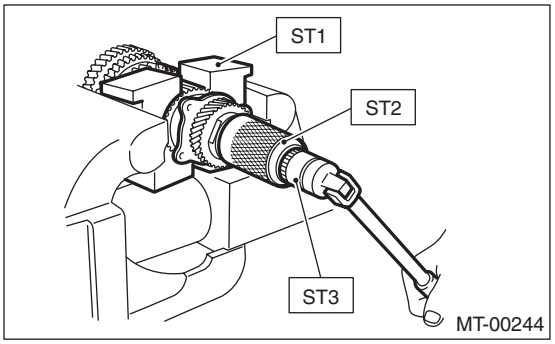

2) Draw out the drive pinion from driven shaft.
Remove the differential bevel gear sleeve, adjusting washer No. 1, adjusting washer No. 2, thrust bearing, needle bearing and drive pinion collar.

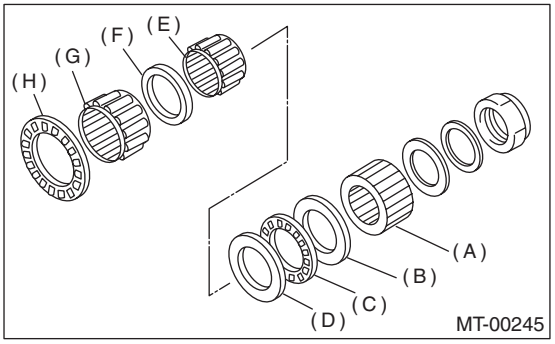

(A) Differential bevel gear sleeve
(B) Adjusting washer No. 1 (25 × 37.5 × t)
(C) Thrust bearing (25 × 37.5 × 3)
(D) Adjusting washer No. 2 (25 × 37.5 × 4)
(E) Needle bearing (25 × 30 × 20)
(F) Drive pinion collar
(G) Needle bearing (30 × 37 × 23)
(H) Thrust bearing (33 × 50 × 3)

3) Remove the roller bearing and washer using ST and a press.

NOTE:
Do not reuse the roller bearing.
ST 498077000 REMOVER

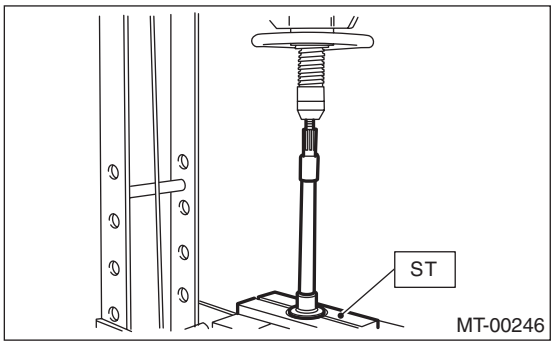

4) Flatten the nut tab. Remove the lock nut using ST1 and ST2.
ST1 499987300 SOCKET WRENCH (50)
ST2 899884100 HOLDER

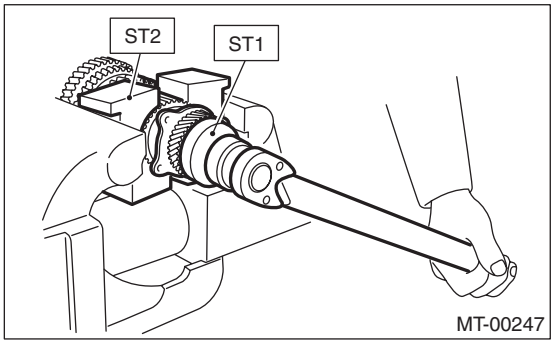

5) Remove the 5th driven gear using ST.
ST 499857000 5TH DRIVEN GEAR REMOVER

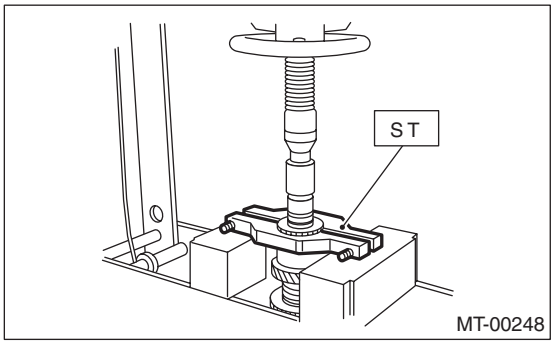

6) Remove the woodruff key.

7) Remove the roller bearing, and 3rd-4th driven gear using ST1 and ST2.
ST1 499757002 INSTALLER
ST2 899714110 REMOVER

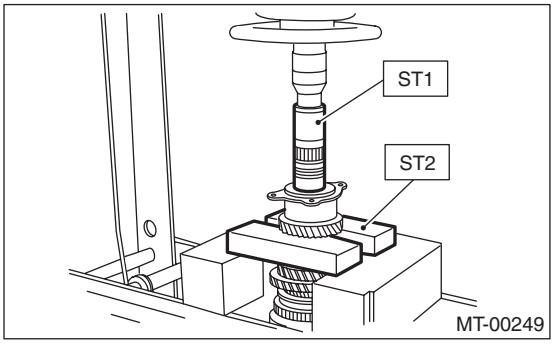

8) Remove the key.
9) Remove the 2nd driven gear, inner baulk ring, synchro cone and outer baulk ring.

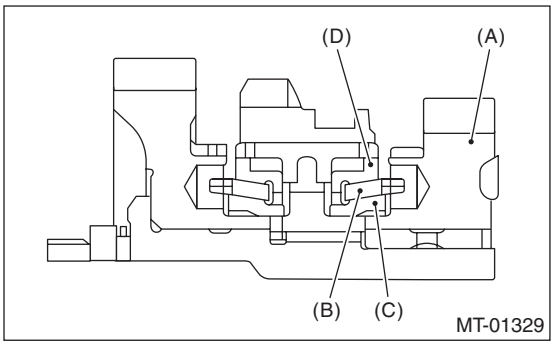

(A) 2nd driven gear
(B) Inner baulk ring
(C) Synchro cone
(D) Outer baulk ring

10) Remove the 1st driven gear, inner baulk ring, synchro cone, outer baulk ring, 2nd gear bushing, gear & hub using ST1 and ST2.

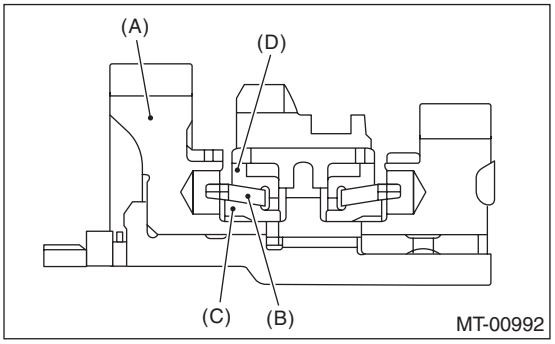

(A) 1st driven gear
(B) Inner baulk ring
(C) Synchro cone
(D) Outer baulk ring

NOTE:
If necessary, use the new gear & hub assembly, when replacing the gear or hub assembly. Because these must engage at the specified point, avoid disassembly as much as possible. If it must be disassembled, mark the engaging point on the spline beforehand.
ST1 499757002 INSTALLER
ST2 899714110 REMOVER

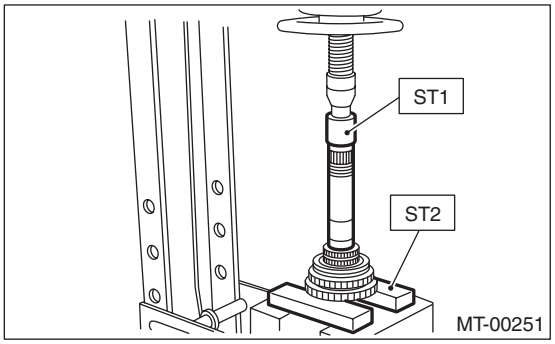

11) Remove the sub gear, washer, and snap ring (outer) for the 1st driven gear. (Non-turbo model)

D: ASSEMBLY

1) Install the sleeve and gear & hub assembly by matching alignment marks.

NOTE:
Use the new gear & hub assembly, if replacing the gear or hub.

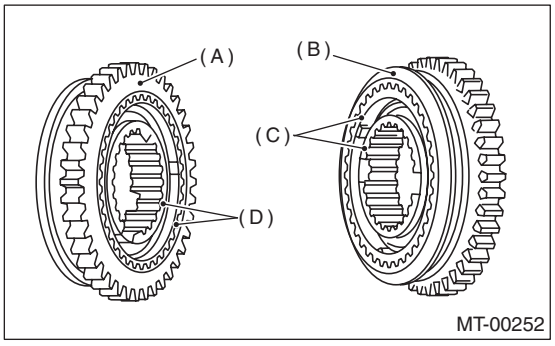

(A) 1st gear side
(B) 2nd gear side
(C) Flush surface
(D) Stepped surface

2) Install the washer, snap ring (outer) and sub gear onto the 1st driven gear. (Non-turbo model)

3) Install the 1st driven gear, inner baulk ring, synchro cone, outer baulk ring, gear & hub assembly onto driven shaft. (Turbo model)

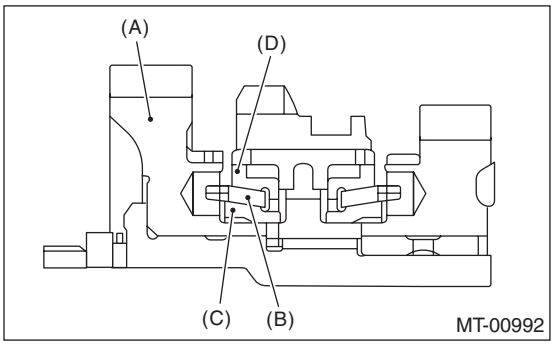

(A) 1st driven gear
(B) Inner baulk ring
(C) Synchro cone
(D) Outer baulk ring

NOTE:
• Take care to install the gear & hub assembly in proper direction.
• Align the baulk ring and gear & hub assembly with the key groove.

4) Install the 2nd driven gear bushing onto the driven shaft using ST1, ST2 and a press.

CAUTION:
Do not apply a load in excess of 10 kN (1 ton, 1.1 US ton, 1.0 Imp ton).

NOTE:
• Attach a cloth to the end of the driven shaft to prevent damage.
• When press fitting, align the oil holes of the shaft and bushing
ST1 499277200 INSTALLER
ST2 499587000 INSTALLER

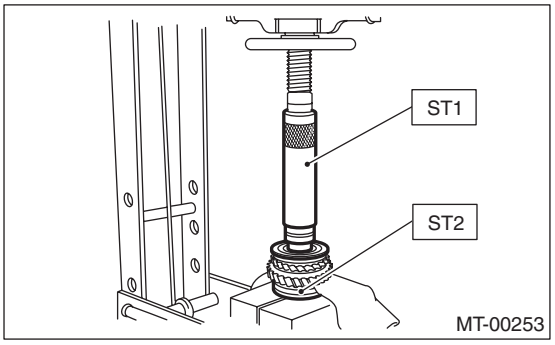

5) Install the 2nd driven gear, inner baulk ring, synchro cone and outer baulk ring, and insert them onto driven shaft.

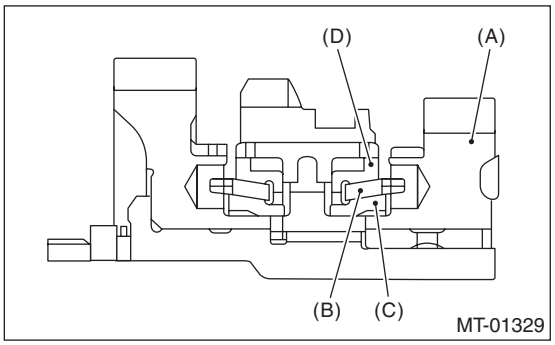

(A) 2nd driven gear
(B) Inner baulk ring
(C) Synchro cone
(D) Outer baulk ring

6) After installing key on driven shaft, install the 3rd-4th driven gear using an ST and a press.

CAUTION:
Do not apply a load in excess of 10 kN (1 ton, 1.1 US ton, 1.0 Imp ton).

NOTE:
Align the groove in baulk ring with the insert.
ST 499277200 INSTALLER

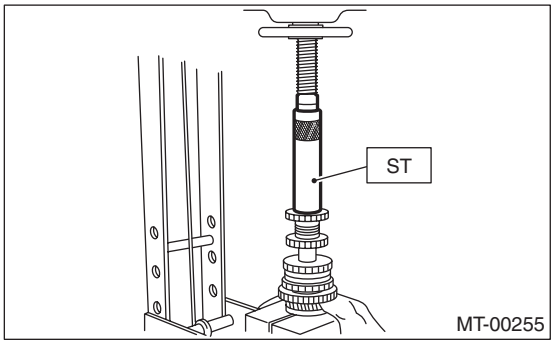

7) Install a set of roller bearings onto the driven shaft using the ST and a press.

CAUTION:
Do not apply a load in excess of 10 kN (1 ton, 1.1 US ton, 1.0 Imp ton).
ST 499277200 INSTALLER

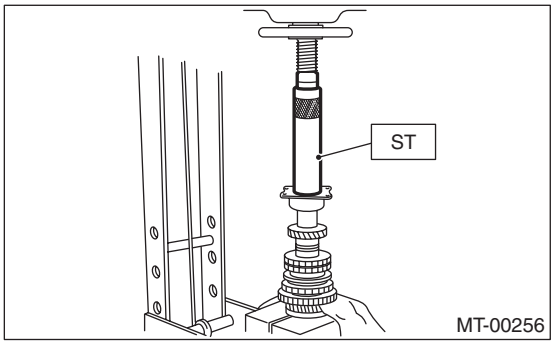

8) Position the woodruff key in groove of the rear of driven shaft. Install the 5th driven gear onto driven shaft using ST and a press.

CAUTION:
Do not apply a load in excess of 10 kN (1 ton, 1.1 US ton, 1.0 Imp ton).
ST 499277200 INSTALLER

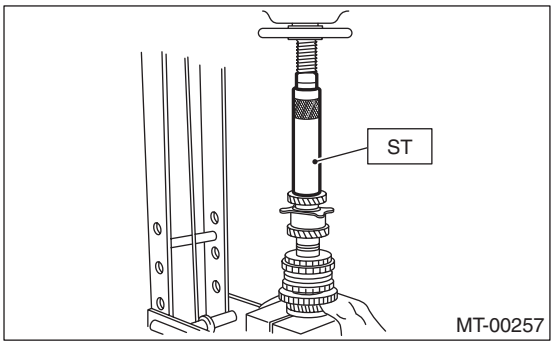

9) Install the lock washer. Install the lock nut and tighten to the specified torque using the ST.
ST 499987300 SOCKET WRENCH (50)

Tightening torque:
260 N·m (26.5 kgf-m, 191.7 ft-lb)

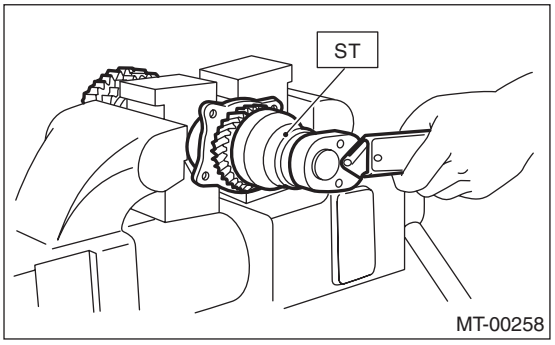

NOTE:
- Crimp the locknut in 2 locations.
- Using a spring scale, check that starting torque of roller bearing is 0.1 to 1.5 N (0.01 to 0.15 kgf, 0.02 to 0.33 lbf).

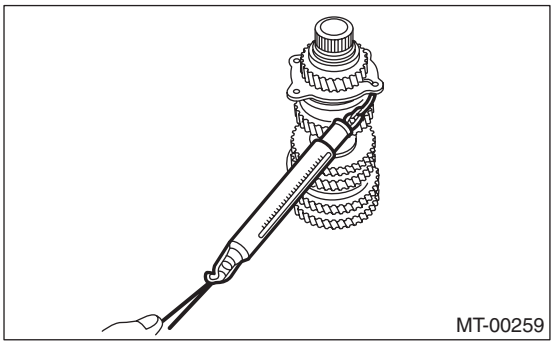

10) Install the roller bearing onto drive pinion.

NOTE:
When installing the roller bearing, note its directions (front and rear) because the knock pin hole of outer race is offset.

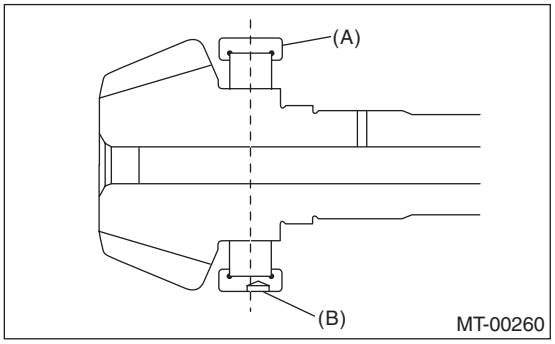

(A) Roller bearing
(B) Knock pin hole

11) Install the washer using ST1, ST2 and a press.

CAUTION:
Do not apply a load in excess of 10 kN (1 ton, 1.1 US ton, 1.0 Imp ton).
ST1 499277100 BUSHING 1-2 INSTALLER
ST2 499277200 INSTALLER

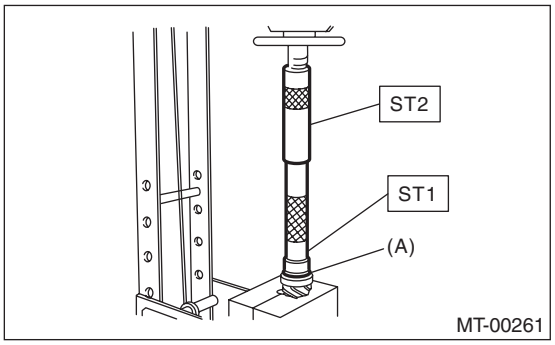

(A) Washer

12) Install the thrust bearing and needle bearing. Install the driven shaft assembly.

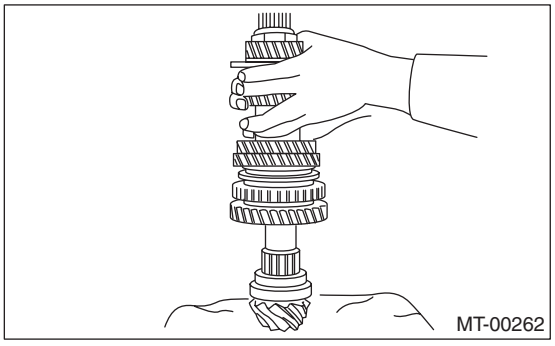

13) Install the drive pinion collar, needle bearing, adjusting washer No. 2, thrust bearing, adjusting washer No. 1 and differential bevel gear sleeve in this order.

NOTE:
Be careful to install the spacer in the proper direction.

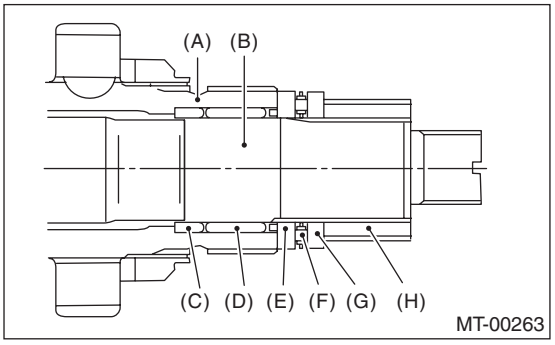

(A) Driven shaft
(B) Drive shaft
(C) Drive pinion collar
(D) Needle bearing (25 × 30 × 20)
(E) Adjusting washer No. 2 (25 × 36 × 4)
(F) Thrust bearing (25 × 37.5 × 3)
(G) Adjusting washer No. 1 (25 × 36 × t)
(H) Differential bevel gear sleeve

14) Adjust the thrust bearing preload. <Ref. to 5MT-66, THRUST BEARING PRELOAD, ADJUSTMENT, Drive Pinion Shaft Assembly.>

E: INSPECTION

Disassembled parts should be washed clean first with cleaning solvent and then inspected carefully.

1) Bearing

Replace the bearings in the following cases.

- When the bearing balls, outer races and inner races are broken or rusty.
- When the bearing is worn.
- When the bearings fail to turn smoothly or emit noise in rotation after gear oil lubrication.
- The ball bearing on the rear side of the drive pinion shaft should be checked for smooth rotation before the drive pinion shaft assembly is disassembled. In this case, because a preload is working on the bearing, its rotation feels like it is slightly dragging unlike other bearings.

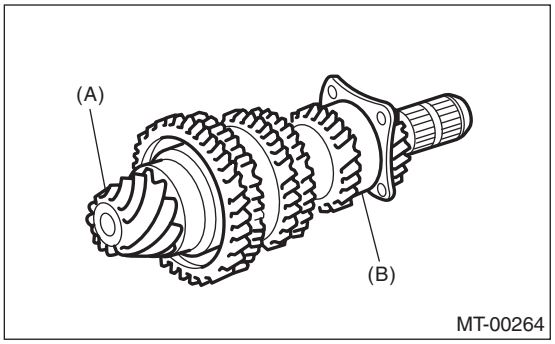

(A) Drive pinion shaft
(B) Ball bearing

- When bearing has other defects.

2) Bushing (each gear)

Replace the bushing in following cases.

- When the sliding surface is damaged or abnormally worn.
- When the inner wall is abnormally worn.

3) Gear

Replace gears in the following cases.

- Replace the gear with new part if its tooth surfaces are broken, damaged or excessively worn.
- Correct or replace if the contact surface of the cone and baulk ring is rough or damaged.
- Repair or replace if the inner surface or end face are damaged.

4) Baulk ring

Replace the ring in following cases:

- When the inner surface and end face are damaged.
- When the ring inner surface is abnormally or partially worn down.
- If the gap between the end faces of the ring and the gear splined part is excessively small, check the clearance (A) while pressing the ring against the cone.

Clearance (A):
0.5 — 1.0 mm (0.020 — 0.040 in)

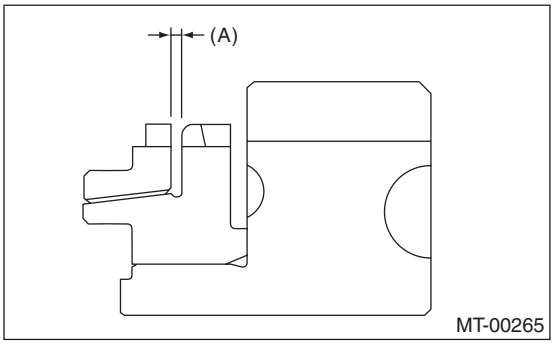

- When the contact surface of the synchronizer ring insert is scratched or abnormally worn.

5) Shifting insert key

Replace the insert key if deformed, excessively worn or defective in any way.

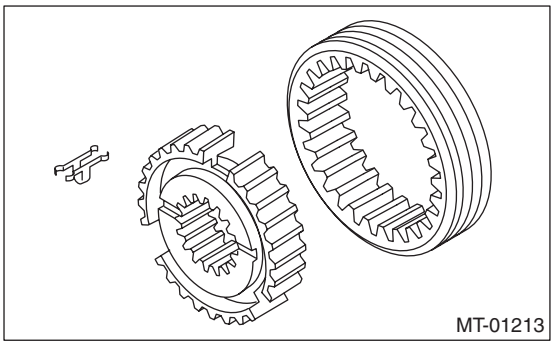

6) Oil seal

Replace the oil seal if the lip is deformed, hardened, worn or defective in any way.

7) O-ring

Replace the O-ring if the sealing face is deformed, hardened, damaged, worn or defective in any way.

F: ADJUSTMENT

1. THRUST BEARING PRELOAD

1) Select a suitable adjusting washer No. 1 to so that dimension (H) will be zero in a visual check. Position the washer (18.3 × 30 × 4) and lock washer (18 × 30 × 2) and attach the lock nut. (18 × 13.5)

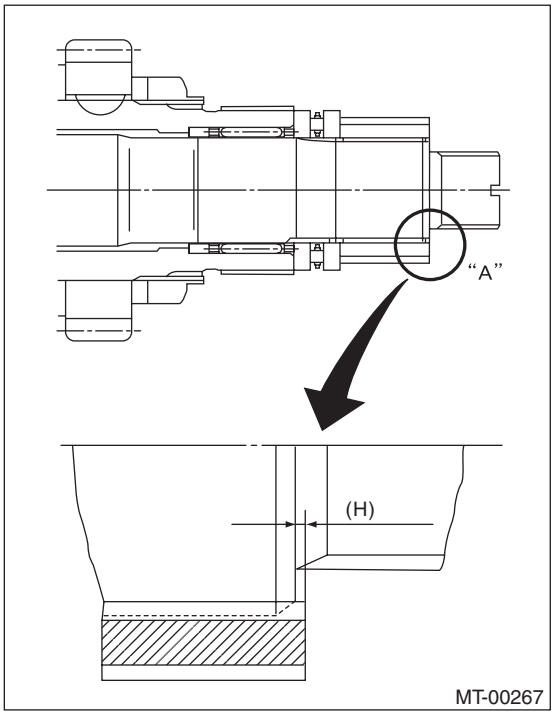

2) Using the ST1, ST2 and ST3, tighten the new lock nut to the specified torque.

ST1 899884100 HOLDER
ST2 498427100 STOPPER
ST3 899988608 SOCKET WRENCH (27)

Tightening torque:
120 N·m (12.2 kgf-m, 88.5 ft-lb)

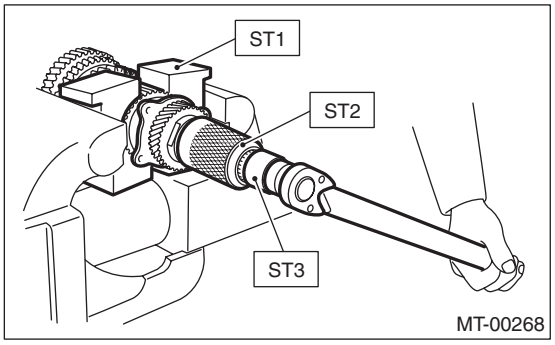

3) After removing the ST2, measure the starting torque using torque driver.

ST1 899884100 HOLDER
ST3 899988608 SOCKET WRENCH (27)

Starting torque:
0.3 — 0.8 N·m
(0.03 — 0.08 kgf-m, 0.2 — 0.6 ft-lb)

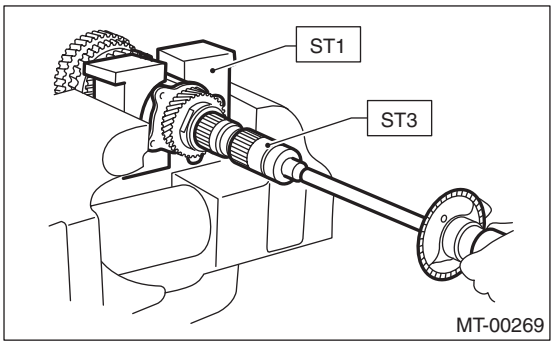

4) If the starting torque is not within the specified limit, select new adjusting washer No. 1 and re-check starting torque.

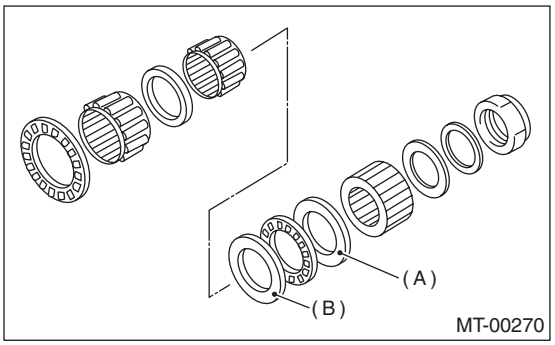

(A) Adjusting washer No. 1
(B) Adjusting washer No. 2

Adjusting washer No. 1	
Part No.	Thickness mm (in)
803025051	3.925 (0.1545)
803025052	3.950 (0.1555)
803025053	3.975 (0.1565)
803025054	4.000 (0.1575)
803025055	4.025 (0.1585)
803025056	4.050 (0.1594)
803025057	4.075 (0.1604)

5) When the specified starting torque cannot be obtained by adjusting washer No. 1, select adjusting washer No. 2 from the following table. Repeat steps 1) through 4) to adjust starting torque.

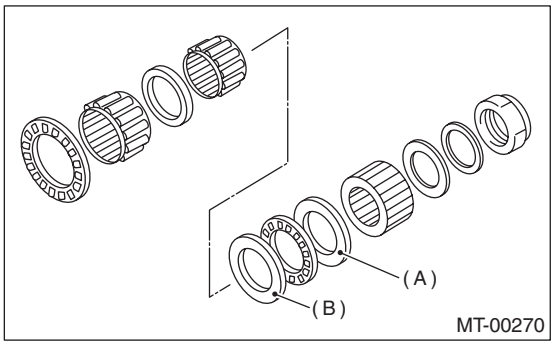

(A) Adjusting washer No. 1
(B) Adjusting washer No. 2

Starting torque	Dimension H	Adjusting washer No. 2
Low	Small	Select thicker one.
High	Large	Select thinner one.

Adjusting washer No. 2	
Part No.	Thickness mm (in)
803025059	3.850 (0.1516)
803025054	4.000 (0.1575)
803025058	4.150 (0.1634)

6) Recheck that the starting torque is within the specified range, then crimp the lock nut at four positions.